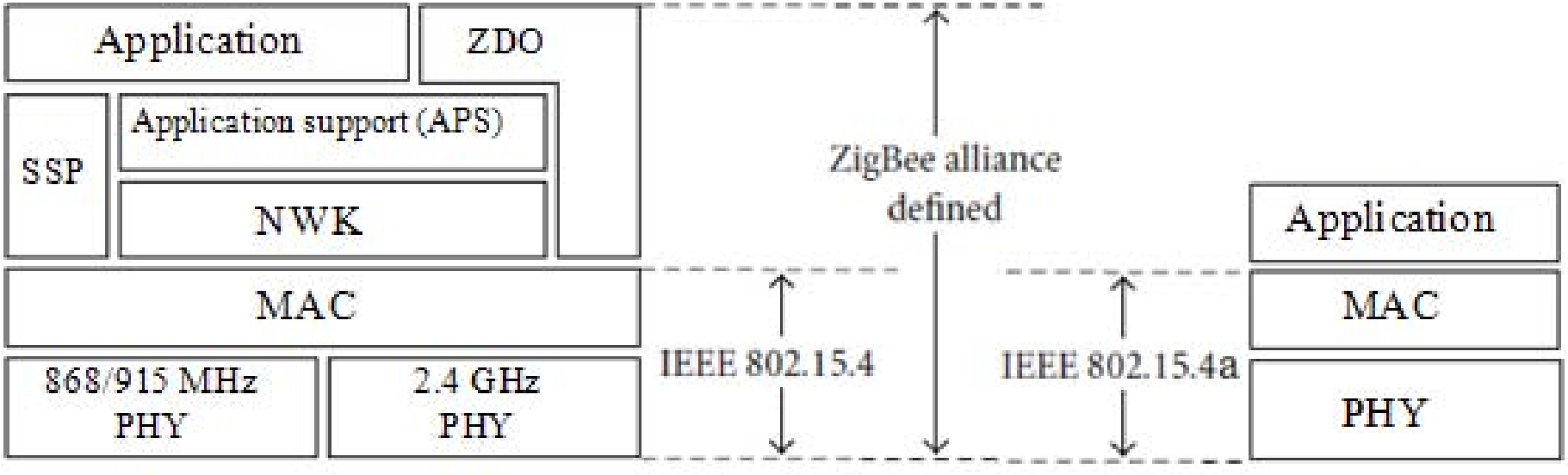
Application
ZDO
Application support (APS)
SSP
NWK
MAC
868/915 MHz PHY
2.4 GHz PHY
IEEE 802.15.4
ZigBee alliance defined
IEEE 802.15.4a
Application
MAC
PHY